CKHA Thermostat Kits
CKHA-TD13/23 Series

Dimplex®
Better solutions through innovation

IMPORTANT INSTRUCTIONS

When using electrical appliances, basic precautions should always be followed to reduce the risk of fire, electric shock and injury to person, including the following:

1. Read all instructions before using this heater.
2. This thermostat kit is for the use with CKHA kickspace series heater only.

WARNING: To prevent electrical shock, disconnect from power sources before installing or servicing. Install in suitable enclosure. Keep free from contaminants.

SAVE THESE INSTRUCTIONS

Installation Instructions

WARNING: Wiring procedures and connections should be in accordance with the National Electric code (NEC) and local codes.

CAUTION: Disconnect electric power supply before working on circuit wiring to prevent electric shock.

1. Remove heater from its carton and remove top cover.
2. Remove knockout in front of wiring compartment for the thermostat shaft.
3. Mount thermostat to the front of the compartment as shown with mounting screws. Install indicator sticker in direction as shown.
4. Wire thermostat into circuit as shown in wiring diagram.
5. Replace top cover and mount heater into opening.

Figure 1 - Single Pole

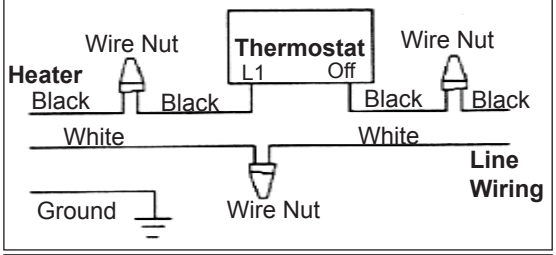

Figure 2 - Double Pole

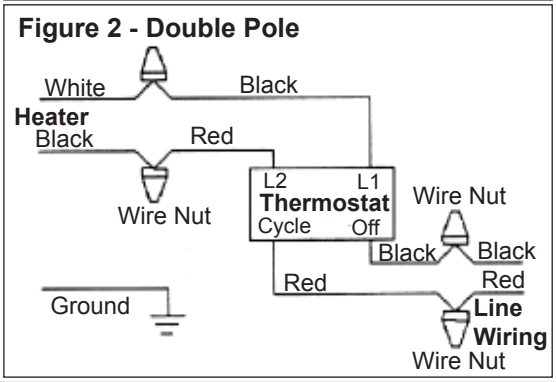

Operation

CAUTION: This thermostat must be properly installed before it is used.

The built-in thermostat senses the temperature of the air at the heater and must be set by trial to provide optimum room comfort.

When first operating heater, turn the adjustment screw clockwise to last stop. Within a short period of time the room will be at desired temperature. Turn the adjustment screw clockwise until the header goes off (you will hear a slight “click”). Keep the adjustment screw at that setting and temperature will be automatically maintained.

Maintenance

CAUTION: Before removing the front cover for cleaning, make certain the power has been turned off at the circuit breaker panel.

CAUTION: Allow adequate time for the element and body casing to cool before attempting to work on the heater.

NOTE: See Heater Manual for Cleaning Instructions.

WARNING: The user can perform cleaning ONLY, all other servicing should be performed by qualified service personnel.

Figure 3

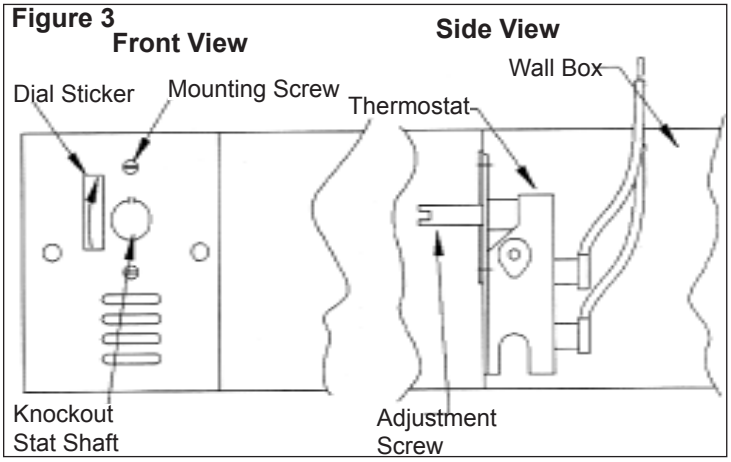

Warranty

All Dimplex Thermostats are warranted against defects in workmanship and materials for one year from date of sale. This warranty does not apply to damage from accident, misuse, or alteration, nor where the connected voltage is more that 5 % above the nameplate voltage, nor to equipment improperly installed or wired or maintained in violation of the instruction sheet. This limited warranty applies only to purchases made in any province of Canada except for Yukon Territory, Nunavut, or Northwest Territories or in any of the 50 States of the USA (and the District of Columbia) except for Hawaii and Alaska. This limited warranty applies to the original purchaser of the product only and is not transferable. No other written or oral warranty applies. No employee, agent, dealer or other person is authorized to give any warranties on behalf of Dimplex. The customer shall be responsible for all costs incurred in the removal or reinstallation and shipping of the product for repairs. Within the limitations of this warranty, inoperative units shall be returned to the nearest Dimplex authorized service center, and we shall repair or replace, at our option, at no charge to you with return freight paid be Dimplex. It is agreed that such repair or replacement is the exclusive remedy available from Dimplex and that DIMPLEX IS NOT RESPONSIBLE FOR DAMAGES OF ANY KIND, INCLUDING INCIDENTAL AND CONSEQUENTIAL DAMAGE. Some States do not allow the exclusion or limitation of consequential damages, so the above exclusion or limitation may not apply to you. This warranty gives you specific legal rights and you may also have other rights which vary from state to state.

1367 Industrial Road • Cambridge ON Canada N1R 7G8
1-888-346-7539 • www.dimplex.com

In keeping with our policy of continuous product improvement, we reserve the right to make changes without notice.
© 2012 Dimplex North America Limited

7201260001R05