Floor Drop-In Heater
FFIH15A31 Series

Dimplex®
Better solutions through innovation

⚠ IMPORTANT INSTRUCTIONS

When using electrical appliances, basic precautions should always be followed to reduce the risk of fire, electric shock, and injury to persons, including the following:

1. Read all instructions before using the heater.
2. The heater is hot when in use. To avoid burns, do not let bare skin touch hot surfaces. The trim around the heater outlet becomes hot during heater operation. Keep combustible materials, such as furniture, pillows, bedding, papers, clothes, and curtains at least 3 ft (0.9 m) from the front of the unit and keep them away from the sides and rear.
3. Extreme caution is necessary when any heater is used by or near children or invalids and whenever the unit is left operating and unattended.
4. Do not operate any heater after it malfunctions. Disconnect power at the service panel and have the heater inspected by a reputable electrician before reusing.
5. Do not use outdoors.
6. To disconnect the unit, turn the controls off, and then switch off at main power supply panel.
7. Do not insert or allow foreign objects to enter any ventilation or exhaust opening as this may cause an electric shock or fire, or damage to the heater.
8. To prevent a possible fire, do not block air intake or exhaust in any manner.
9. All electrical heaters have hot and arcing or sparking parts inside. Do not use in areas where gasoline, paint, or flammable liquids are used or stored.
10. Do not modify this heater. Use it only as described in this manual. Any other use not recommended by the manufacturer may cause fire, electric shock or injury to persons.

SAVE THESE INSTRUCTIONS

Installation Instructions

⚠ **WARNING:** To reduce the risk of fire, do not store or use gasoline or other flammable vapors or liquids in the vicinity of the heater.

⚠ **CAUTION:** High temperature, risk of fire, keep electrical cords, drapery, furnishings, and other combustibles at least 3 feet (0.9 m) from the front of the heater.

! **NOTE:** It is extremely important to read all information labels. Care must be taken to ensure that the heater is rated the same voltage as the electrical supply wires. Failure to do so could result in unsafe heater operation as well as damage to the unit. If replacing an existing heater, check the labels of the old heater to ensure the voltage of the new heater is compatible.

! **NOTE:** Heaters may be installed in poured concrete floor construction. Opening should be framed with wood so that the heater box is inserted in wood frame. DO NOT use heater box as a form when pouring concrete.

! **NOTE:** This heater is equipped with a manual reset device. Remove interior to reset.

! **NOTE:** Air and grille temperatures conform to CSA & UL regulations but may discolour certain materials, particularly those materials incorporating clear vinyl. Materials should be checked prior to installation to determine if discolouration or distortion would occur in the vicinity of 60°C (140° F).

1. Provide floor opening 7 1/4” (184 mm) wide X 14 1/4” (362 mm) long x 8” (203 mm) deep. (Figure 1)
2. Maintain a minimum clearance of 6” (153 mm) from all walls.
3. Remove grille and pull out inner assembly.
4. Remove terminal cover and appropriate knockout for supply wires.
5. Insert outer case into floor. Flange must be located at top of finished floor or carpet. Furring strips as thick as the pad and carpet must be used. Edge of carpet and pad must not extend into heater. Secure outer case to the floor with screws or nails. Pull through about 6” (153 mm) of supply wires and connect to pigtails. Connect green wire to ground screw.
6. Replace terminal cover.
7. Make sure outer case is free of all dirt and debris. Replace inner assembly in outer case and secure grille.

⚠ **WARNING: DO NOT BLOCK AIR FLOW IN ANY WAY WITH DRAPES, RUGS OR OTHER OBJECTS.**

⚠ **CAUTION:** Should the High Temperature light come on, disconnect power to the heater, or turn down the thermostat fully counterclockwise and call a licensed electrician. Do not use heater until problem is determined and fixed.

FIGURE 1

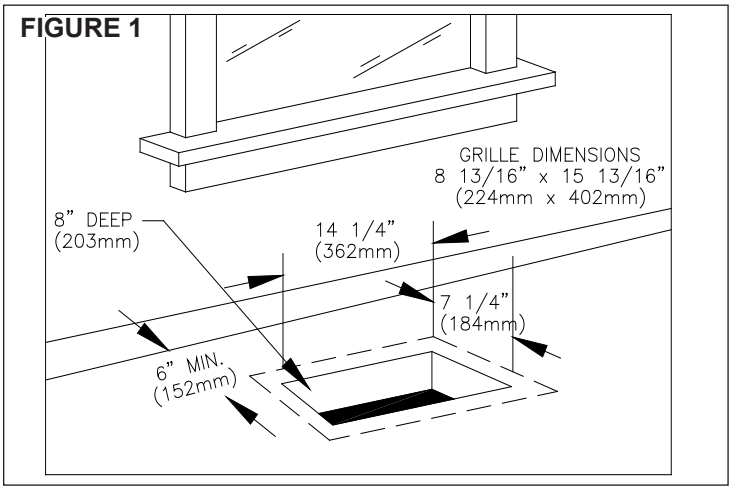

FIGURE 2

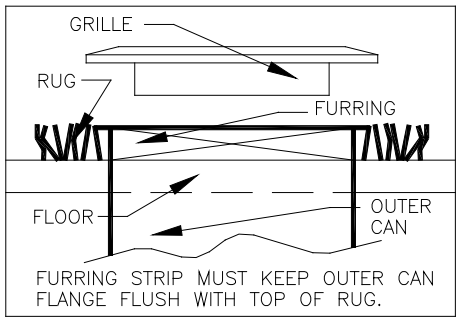

Operation

WARNING: This heater must be properly installed before it is used.

1. Prior to energization remove all construction dirt (plaster, sawdust, etc.) from interior and exterior of heater.

Dimplex heaters are designed and tested for safe and trouble-free operation. All Dimplex heaters are protected against overheating by a built-in thermal cutout. Free airflow throughout the heater is extremely important for the most efficient operation of the heater. Restricted airflow may cause the thermal overload protector to cycle the heater "ON and OFF". A cycling heater will not supply sufficient heat to the room.

FIGURE 3

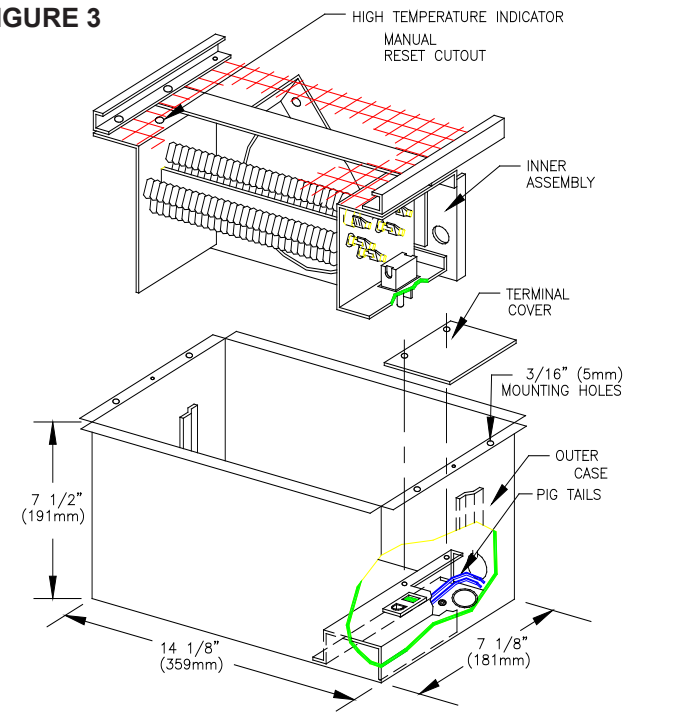

FACTORY CONNECTION

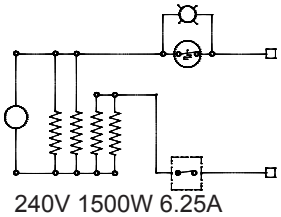

240V 1500W 6.25A
For 240V 750W,
Disconnect 2-6, 3-7.

FIELD CONNECTION

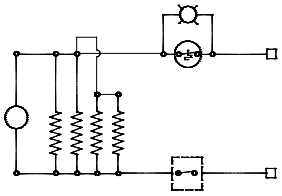

120V 1500W 12.5A
Disconnect cutout black lead from #1 and #2, and connect leads "M" and "R". Add yellow jumper provided between leads #1, #2, #3 AND #4, Red lead, Motor lead.

Maintenance

CAUTION: Before removing the front cover for cleaning, make certain the power has been turned off at the circuit breaker panel.

CAUTION: Allow adequate time for the element and body casing to cool before attempting to work on the heater.

The FFIH series contain no moving parts. Since the appliance contains no moving parts little maintenance is required beyond vacuum cleaning. It is however essential that the heater is not operated with an accumulation of dust or dirt on the element, as this can cause a build up of heat and eventual damage. For this reason the heater must be inspected regularly, depending upon conditions and at least at yearly intervals. Once cleaning is complete replace the front cover and restore power.

WARNING: The user can perform cleaning ONLY. All other servicing should be performed by qualified service personnel.

Warranty

The Manufacturer warrants the heating elements and components of the enclosed product against any defect in material or workmanship for a period of one year from the date of purchase. In full satisfaction of any claims under this Warranty the Manufacturer will repair or replace without charge, in its factory or in the field as it alone may decide, any parts which in its opinion are defective.

The Manufacturer shall not be responsible for any transportation or shipping costs in relation to such repair or replacement except as specifically assumed by it. Misuse of this product or repairs by persons other than the Manufacturer's authorized personnel without the Manufacturer's written approval, will void this Warranty.

This Warranty is in lieu of all other warranties or conditions whether express or implied including but not limited to those of merchantability or fitness for purpose and shall constitute the sole remedy of the Purchaser and the sole liability of the Manufacturer in respect of the sale of the product, whether in the nature of breach or breach of fundamental term, or of negligence or otherwise.

The Manufacturer shall not be liable for any special, indirect or consequential damages or for any damages resulting from removal or replacement of a heater subject to warranty claim without the Manufacturer's authorization.

This Warranty is transferable by the original consumer purchaser of the product. Any claims under this Warranty must be submitted in writing to the Service Manager, Dimplex North America Ltd., 1367 Industrial Rd., Cambridge, Ontario N1R 7G8, Canada.

Replacement Parts

Motor	2000280500RP
Fan Blade	5300130200RP
Element	2200160001RP
Limit Control Thermo Disk	L82-163ARP
High Limit Kit	A64-019ARP
Convenience Outlet Kit	A64-12A-1RP

Dimplex®
1367 Industrial Road • Cambridge ON Canada N1R 7G8
1-888-346-7539 • www.dimplex.com

In keeping with our policy of continuous product improvement, we reserve the right to make changes without notice.
© 2013 Dimplex North America Limited