We Manage Heat ®

Aerial Snow Melting Controller
MODEL LCD®–7A SNOW SWITCH®

DATA SHEET

FEATURES & BENEFITS

- Simple installation
- Melt-Track™ for improved energy efficiency
- On-Demand™ for longer sensor life
- Sno-Test™ for simple on-site testing
- Extremely low standby power consumption
- Minimum energy cost
- Long trouble-free life
- No annual maintenance
- Reliable snow melting
- C-UL-US

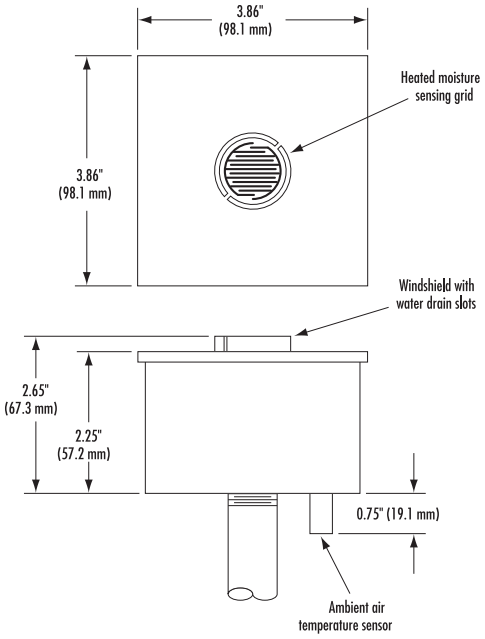

DESCRIPTION

The patents pending LCD–7A Snow Switch® makes automatic melting a cost effective alternative in even the smallest applications. Heaters operate at temperatures below 38˚F (3.3˚C) only when required. The energy saving Melt-Track™ feature continues heater operation after snow stops to ensure complete melting. The LCD–7A needs only a 3 hour hold-on time to compensate for site differences compared to the up to 10 hours of earlier products.

Severe air pollution combined with continuous moisture sensor operation can reduce product life through corrosion and electrochemical reactions. The On-Demand™ feature counters those problems by powering the moisture sensor only when required thus significantly increasing its life.

Verifying system functionality after installation or when troubleshooting used to require spray circuit cooler or ice for controller activation. The Sno-Test™ feature eliminates this need by performing a self-test after power application, and operating heaters in a unique pattern for a few seconds. Reading the test results takes only an AC voltmeter or clamp-on ammeter.

The LCD–7A operates from 120 volts AC while consuming less than 0.6 watts idling. It controls heater loads up to 16 amps at 120 volts. The operating temperature range extends from –40˚F to 140˚F (–40˚C to 60˚C). The rugged polycarbonate enclosure provides excellent protection at temperature extremes.

For complete information describing its application, installation and features, please contact Customer Service or visit www.networketi.com.

Installation

The model LCD–7A Snow Switch® housing has one ½" (16mm) NPT threaded opening. Choose an unobstructed elevated location exposed to snowfall. Rigidly mount in upright, plumb position as shown.

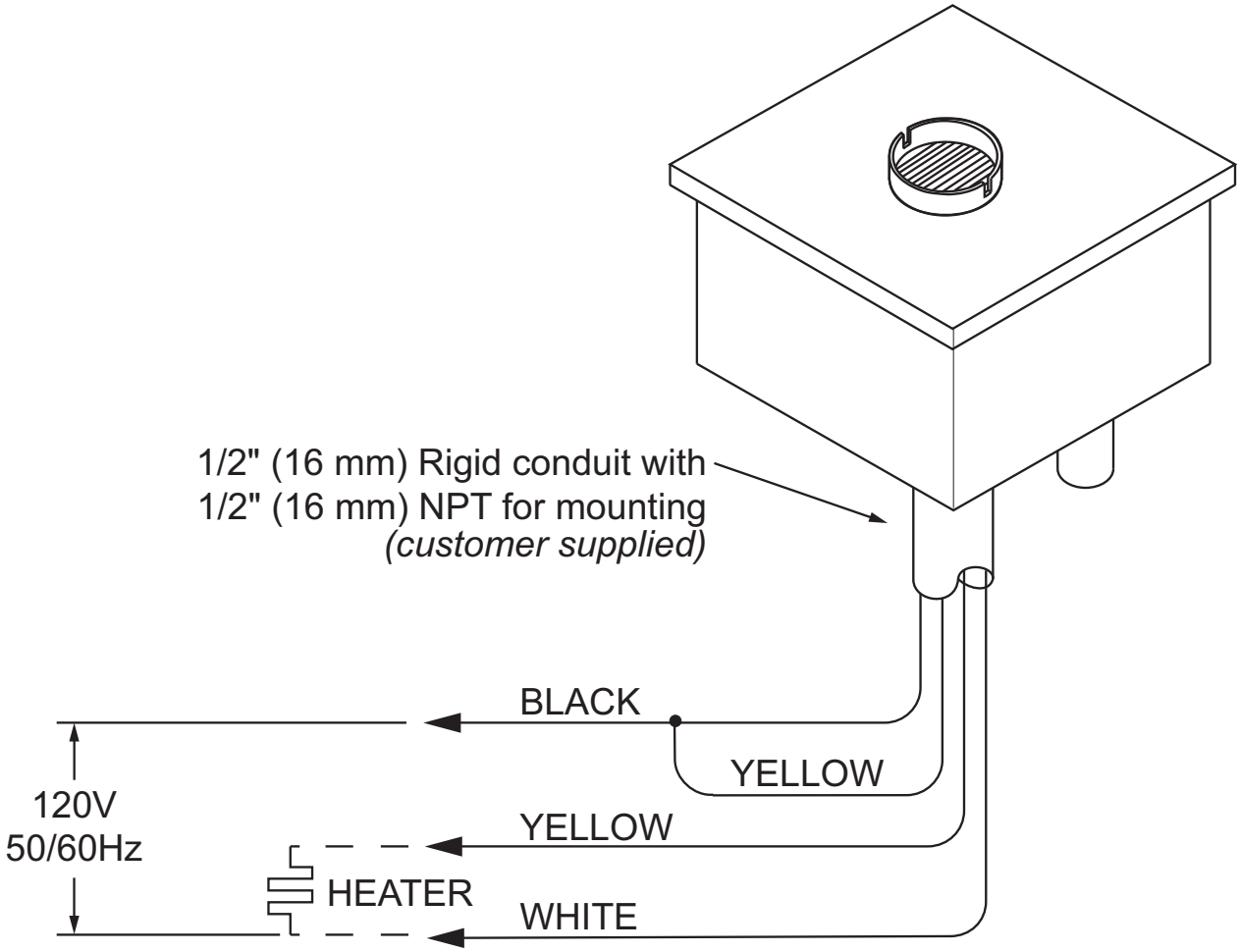

ORDERING INFORMATION

Order Number	Description
21035	LCD–7A Snow Switch®

c UL us LISTED 109R Type 873 Temperature Regulating Equipment

DISCLAIMER

Environmental Technology, Inc. makes no representations or warranties, either expressed or implied, with respect to the contents of this publication or the products that it describes, and **specifically disclaims any implied warranties of merchantability or fitness for any particular purpose**. Environmental Technology, Inc. reserves the right to revise this publication, and to make changes and improvements to the products described in this publication, without the obligation of Environmental Technology, Inc. to notify any person or organization of such revisions, changes or improvements.

The ETI logo, Snow Switch, We Manage Heat and LCD are registered trademarks of Environmental Technology, Inc.
Melt-Track, On-Demand and Sno-Test are trademarks of Environmental Technology, Inc.
Copyright © 2010 Environmental Technology, Inc. All rights reserved.