SAFETY INFORMATION AND WARNINGS

Pilot Duty

The SST–3 Adjustable Electronic Thermostat with GFEP cannot be used for Pilot Duty applications.

Resistive Load Usage Only

This product is not for use with Inductive loads. Inductive loads may create nuisance tripping of the Ground Fault Equipment Protection circuit.

Abnormal Odor or Smoke

In the event of smoke or a burning or abnormal odor, immediately interrupt power to the unit by turning off the circuit breaker protecting the unit.

Electrical Shock / Fire Hazard

Any installation involving electric heater wiring must be grounded to earth to protect against shock and fire hazard. Suitable ground fault detection and interrupting systems must be in use at all times to reduce shock and fire hazard and to protect equipment.

Electric wiring to heating elements must be installed in accordance with National Electrical Code (NEC) requirements, as well as all other local and applicable electrical codes and any third party standards. Follow the installation instructions contained in this manual and also those provided by the heater manufacturer.

Size the circuit breaker in accordance with the size of the expected load. The maximum current load for the SST–3 is 30 Amp resistive. This product is intended for use in light commercial applications.

Make certain that the heater shield is properly grounded. Failure to do so may result in damage to the equipment or fire.

Following installation and prior to beginning system operation, perform the Post-Installation Test described in this manual.

PRODUCT TESTING RECORD

Use this page to record the results of the Mega-Ohm test procedure in this manual. This record will be a useful resource throughout the life of the product.

MEGA-OHM TEST (Page 9)
(Follow heat tape manufacturer's recommendations or, if not available, use a 500 VDC mega-ohm meter on the heat tape.)

TEST DATE	AMBIENT TEMPERATURE	READING (Target: 20 MΩ or greater; Check heat tape manufacturer's documentation.)

TABLE OF CONTENTS

SECTION **PAGE**

Safety Information and Warnings ---------- 1
Product Testing Record ---------- 2
Unpacking the Unit ---------- 4
Inventory ---------- 5
Product Description ---------- 6
Installing the Control ---------- 7
Preparation and System Set-Up ---------- 9
System Schematic Diagrams ---------- 10
Post-Installation Testing ---------- 13
Operation ---------- 15
Ground Fault Operation ---------- 20
Error Codes ---------- 21
Maintenance ---------- 22
Using the Jumper ---------- 23
Troubleshooting ---------- 24
Specifications ---------- 26
Ordering Information ---------- 28

UNPACKING THE UNIT

Immediately upon receipt, inspect the container and packing material for any noticeable damage. Unpack the unit, taking care not to damage the packing materials. Save the shipping container and related materials until normal operation has been established. If the unit must be returned, take care to ensure that it is repackaged as it was received.

As soon as the unit arrives at your facility, inspect it for mechanical damage. If any of the following problems is found, contact Environmental Technology, Inc., Customer Service immediately:

- contents incomplete or incorrect;
- internal or external mechanical damage; or
- defective operation.

ETI Customer Service is available between 8:00 a.m. and 5:00 p.m. Eastern Time at (574) 233-1202 or (800) 234-4239. In the event of shipping damage, keep the packing materials for inspection by the carrier.

RETURNS AND REPLACEMENT PART PURCHASES

Equipment cannot be returned for credit once it has been installed. ETI will repair or replace faulty equipment under warranty. Prior to removal of equipment for warranty return, please contact ETI Technical Support at (800) 234-4239 for troubleshooting assistance.

Before returning a unit to Environmental Technology, Inc., obtain a Return Merchandise Authorization from our Customer Service Department, available between 8:00 a.m. and 5:00 p.m. Eastern Time at (574) 233-1202 or (800) 234-4239. If possible, use the original container and packing materials when packing the unit for shipment. It is important to mark the Return Merchandise Authorization clearly on the outside of the shipping container so that it may be correctly processed upon receipt at Environmental Technology.

For more information about replacement parts or for a replacement Data Sheet or Manual, please visit http://www.networketi.com/.

INVENTORY

Using the information below, verify that the shipping package contains all of the parts listed. Notify Environmental Technology, Inc., Customer Service immediately if there are any discrepancies. Environmental Technology, Inc. Customer Service is available between the hours of 8:00 a.m. and 5:00 p.m. Eastern Time at (574) 233-1202 or (800) 234-4239.

Item Number	Item Description
1	TRACON Model SST–3 Adjustable Electronic Thermostat with GFEP
2	Accessory Kit
3	Installation Sheet
4	Instruction Manual (this document)
5	Temperature Probe Assembly

PRODUCT DESCRIPTION

The TRACON Model SST–3 Adjustable Electronic Thermostat with Ground Fault Equipment Protection (GFEP) circuitry automatically controls heaters for freeze protection, grease line trace, and light process control. The SST–3 can be powered from an automatically selected operating voltage from 200 VAC up to 277 VAC and is rated for 30 amps maximum resistive load. An integral 30mA of GFEP provides additional safety and compliance with national and local electrical codes. The unit is housed in an environmentally-sheltered, weather-resistant enclosure for enhanced durability.

Features and Benefits

- Adjustable set point facilitates multiple process control applications
- NEC Class 2 temperature sensor can be located up to 2,000 feet from the control for enhanced installation options
- 3-character display for easy setting and read-out
- Integral 30 mA of GFEP with manual and automatic test features
- Fire Protection Mode maintains heater operation for use in critical fire protection systems
- Durable weather-resistant enclosure permits indoor or outdoor installation
- UL Listed to UL 873 Temperature-Indicating and -Regulating Equipment
- UL Listed to UL 1053 Ground-Fault Sensing and Relaying Equipment

The TRACON Model SST–3 Adjustable Electronic Thermostat with GFEP is permanently connected equipment and does not have an internal disconnect device. A readily accessible disconnect device, short circuit, and current protection shall be provided and are not supplied by Environmental Technology, Inc. When power is applied, the system will start.

INSTALLING THE CONTROL

Install this unit in compliance with National Electrical Code (NEC) standards, as well as all other local and applicable electrical codes for your area. Prior to beginning installation, make sure that the facility has properly sized electric service and breaker. For additional information regarding electrical ratings and facility power requirements, refer to the Specifications section of this manual.

This unit is intended for wall mount installation only. The wall used for the installation should be capable of supporting four times the weight of the unit, or about 20 pounds. Although the weather-resistant enclosure can be installed outside, make sure to install the unit directly to a solid, stable surface. Install the box itself; internal connections for the alarm relay and the temperature probe will be made in the next section.

The dimensions shown in the Top View of Figure 1 are for the mounting hole footprint location, not the overall outside dimensions of the unit, and run from centerline to centerline of the four slotted mounting holes. The dimension shown in the Right Side View of Figure 1 is from the bottom of the enclosure to the top of the clear plastic lid and shows the distance the unit will protrude from the mounting surface. For overall outside dimensions, refer to the Enclosure section on page 26 of this manual.

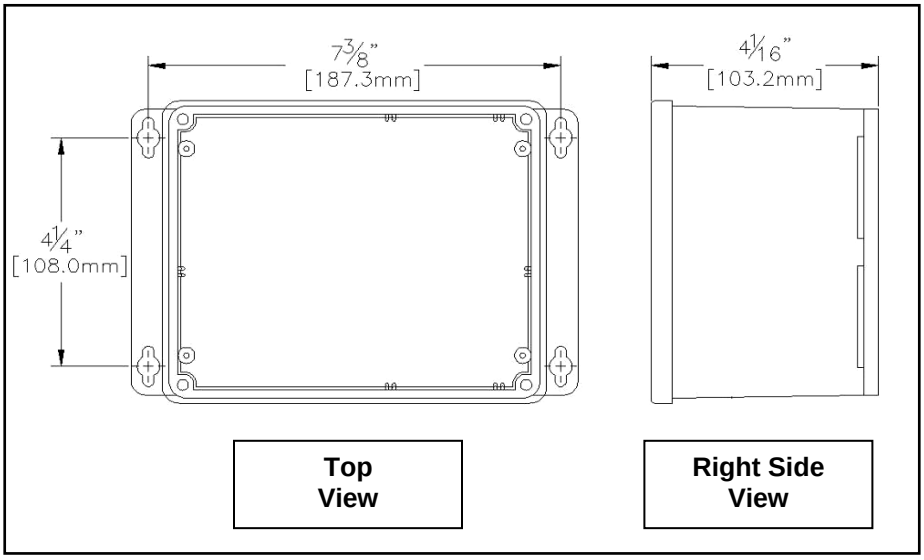

Figure 1. SST–3 MOUNTING HOLE FOOTPRINT.

To install the control box, perform the steps below.

1. Use the box as a template to determine the mounting hole footprint pattern. Hold the unit up against the wall onto which it will be mounted, with the mounting blocks against the wall, then mark the wall at the locations of the slotted mounting holes to determine the location of the mounting holes on the wall.

2. As desired, to hold the box in place during the installation process, you may loosely install one or both of the top mounting bolts as the remaining holes are marked. To ensure accurate and level installation, however, do not fully tighten any of the mounting hardware until the locations for all the mounting holes have been determined and marked.

3. Once the four mounting holes have been located and marked, install the box to the wall using properly sized 5/16-inch mounting hardware. Be sure to use mounting hardware appropriate for the job, heavy-duty and long enough to fasten the unit securely to the mounting surface. Make sure to use all four mounting holes. Because conduit will also be installed to protect the cables running from the control box, install the box, but leave the mounting hardware loose enough to work the conduit into place. The conduit will be installed later in this process, at which time all mounting hardware will be securely tightened.

PREPARATION AND SYSTEM SET-UP

With system circuit breaker off, install the power cable, heater cable, temperature probe, alarm relay, and conduit. Refer to Figures 2, 3, and 4, as well as Table 1. Remove the clear plastic unit cover and face plate to access the inside of the unit. Replace the clear plastic cover and face plate following installation.

INSTALLING THE POWER CABLE

Install the power cable as shown in Figure 2 and described in Table 1.

INSTALLING THE HEATER CABLES

Install the heater cables in accordance with National Electrical Code (NEC) and manufacturers' requirements, as well as other applicable codes. Properly seal and waterproof all cable runs. Position the heater cable so it does not interfere with the temperature probe. Never touch the ends of the yellow leads or let the yellow leads contact each other or any component inside the control box once power is applied. Upon conclusion of heater cable installation, perform a Mega-Ohm or "megger" test on the heater cables as directed by the heater cable manufacturer. Record results on page 2 and retain for future reference.

INSTALLING THE TEMPERATURE PROBE

Install the sensor end of the temperature probe as desired for the intended function. Route the temperature probe through conduit or through the weather-tight connection port on the control. Connect both temperature probe leads to the Temp Probe terminals on the PC board. Refer to Figure 3.

INSTALLING THE ALARM RELAY

Install the alarm relay as shown in Figures 2 and 3 and described in Table 1. Refer especially to the paragraph on Page 11 under Figure 3. After reading the paragraph under Figure 3, connect the alarm relay leads as desired.

INSTALLING THE CONDUIT

Only UL listed, Type 4X, raintight conduit hubs and cable glands are to be used. The hub is to be connected to the conduit of a rigid conduit system before the hub is connected to the enclosure. Select, measure, cut, and install the conduit in accordance with all National Electrical Code (NEC) requirements, all local and applicable building and electrical codes, as well as the manufacturer's instructions. Ensure a sealed, watertight installation.

SYSTEM SCHEMATIC DIAGRAMS

Figure 2 presents a schematic diagram of the SST–3.

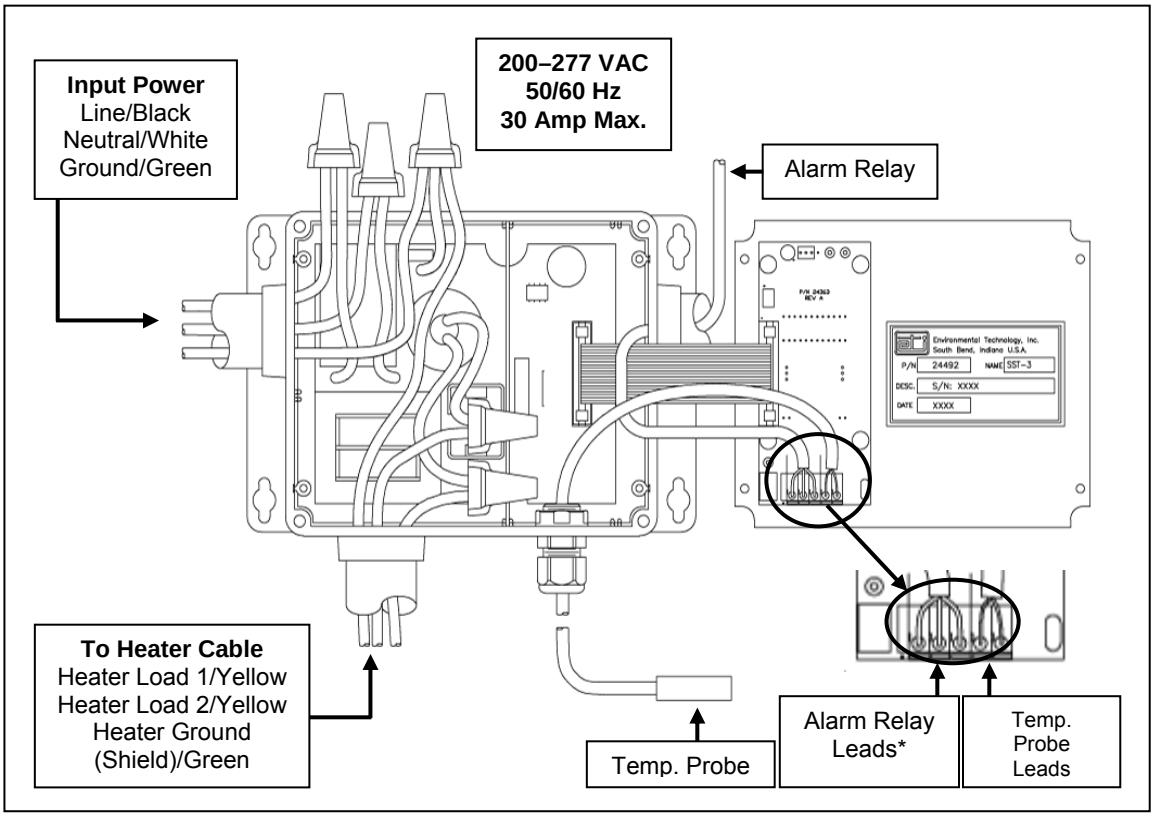

* See Page 11.

Figure 2. REPRESENTATIVE SST–3 SYSTEM SCHEMATIC.

POWER Cable (provided by customer)	Size for 30 Amp maximum load
HEATER Cable (provided by customer)	Size to system load
ALARM RELAY Wiring (provided by customer)*	No larger than #18 AWG jacketed, 3-conductor*
TEMPERATURE PROBE Wiring	#18 AWG jacketed, 2-conductor

* See Page 11.

	Wire Lead	Connect To:
INPUT Power (provided by customer)	Line 1	Black
	Line 2 / Neutral	White
	Ground	Green
OUTPUT To Heater (provided by customer)	Heater Load 1	Yellow
	Heater Load 2	Yellow
	Heater Ground (Shield)	Green
OUTPUT To Alarm Relay* (provided by customer)	Hook-Up Wire 1	COM
	Hook-Up Wire 2	Either NC OR NO*

* See Page 11.

Table 1. CABLE RATINGS AND CONNECTIONS.

Refer to Figure 3 for useful information regarding the wiring connections on the front panel PC board.

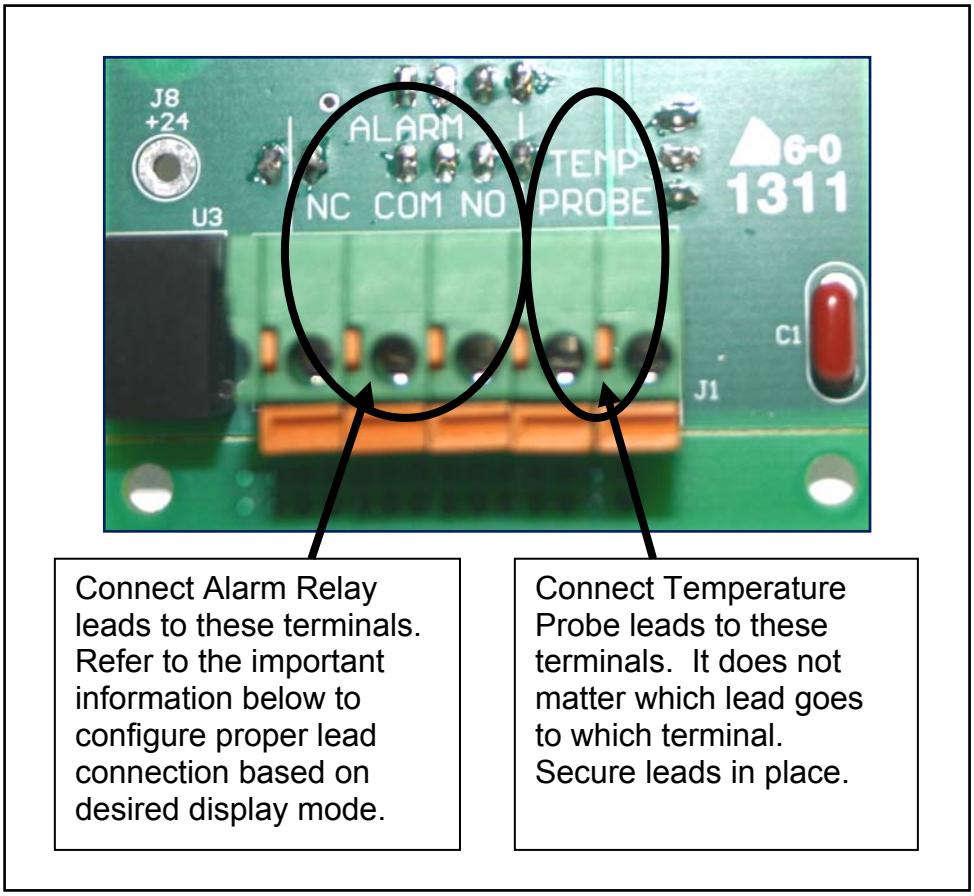

Figure 3. SST–3 FRONT PANEL PC BOARD TERMINALS.

An Alarm or power off condition can be communicated in either of two ways and it is important to make the proper alarm relay connections to achieve the desired result. The middle terminal labeled COM (Common) will always be used. Connect one alarm relay lead to the COM terminal. Now, if, in your system, an external alarm light or indicator will <u>come on</u> to communicate an alarm or power off condition, connect the other alarm relay lead to the NC or Normally Closed terminal. But, if, in your system, an external alarm light or indicator will <u>go off</u> to signal an alarm or power off condition, connect the other alarm relay lead to the NO or Normally Open terminal. Remember that when power is applied to the unit, the Common and Normally Open contacts close to form a complete circuit. If using a three-lead wire, it is not necessary to use all three leads when connecting the alarm relay. Use the COM or Common terminal and <u>either</u> of the other two terminals, as desired, based on the information in this paragraph.

A representative diagram of an SST–3 installation along the length of a pipe is shown below in Figure 4. Notice how the heat tape and temperature probe do not cross.

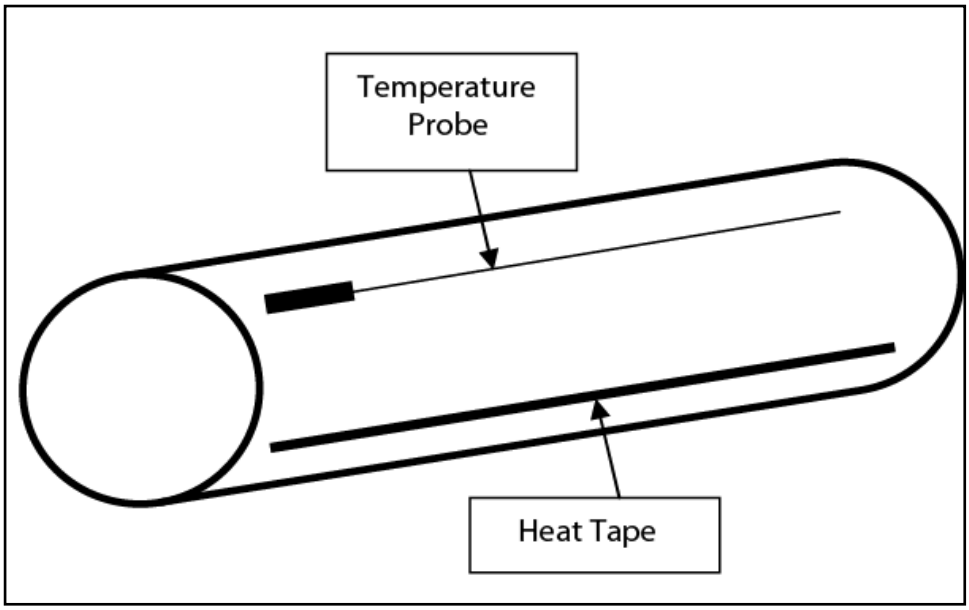

Figure 4. REPRESENTATIVE SST–3 PIPE INSTALLATION.

If the pipe in Figure 4 were insulated, the insulation would wrap around the pipe, as well as the temperature probe and heat tape.

POST-INSTALLATION TESTING

Installation errors cause the majority of system problems. Therefore, thoroughly test the system before placing it into service. Simple electrical tests and visual inspection can identify any wiring errors, as well as improper waterproofing. Visually inspect for proper wiring and waterproofing, and make sure that all box joints are sealed and that all wiring is properly terminated.

In performing the post-installation test procedure as described below, the heat tape will activate, even if only for a brief time, so that system performance can be accurately simulated. For that reason, and depending specifically on the ambient temperature or general conditions in which the system is being installed, it is recommended to continuously and carefully monitor the system and its components during the entire testing process. High temperatures can damage certain materials. Never leave the site during testing. Never leave the system unattended during testing. If fire or smoke or an abnormal odor is observed during testing, shut off power to the system and suspend the test.

It is the responsibility of the on-site installer to assess the overall safety concerns at the site. To most accurately simulate and measure system performance, leave the heat tape connected to the control during testing. Do not touch bare or exposed metal or wiring. Even if the heaters are disconnected for testing, voltage is still applied to the yellow leads. Therefore, never touch the ends of the yellow leads or let the yellow leads contact each other or any component inside the control box.

CONTROL TESTING

1. Note the ambient temperature at the point of the SST–3 temperature probe.

2. With unit power on, using the Down control button on the face of the unit, enter a set point lower than the current ambient temperature. The green SUPPLY LED light should be lit solid, but no other LED indicator lights should be lit.

3. Now, press the GFEP Test/Reset button on the unit face plate. The red GFEP LED light should flash, indicating a self-test of the GFEP circuitry, during which time you should also hear some clicking sounds from the relays inside the unit. The red GFEP LED indicator light should go out once the GFEP self-test is complete.

4. Using the Up control button on the face of the unit, increase the set point to be higher than the current ambient temperature at the point of the temperature probe. The HEAT LED indicator light should now come on.

5. At the conclusion of this test, set the adjustable temperature setting to the desired operational level by using the Down or Up control buttons on the front of the unit. If the set point is above the ambient temperature, the HEAT LED will come on until that temperature is reached, after which, only the green SUPPLY LED should be on. The test is now complete.

OPERATION

This section presents operating instructions for the unit and begins with a picture of the front panel. Refer to Figure 5. Note the system information located on the left side of the panel, as well as the operator controls and indicators on the right side of the panel. The controls and indicators are explained in this section.

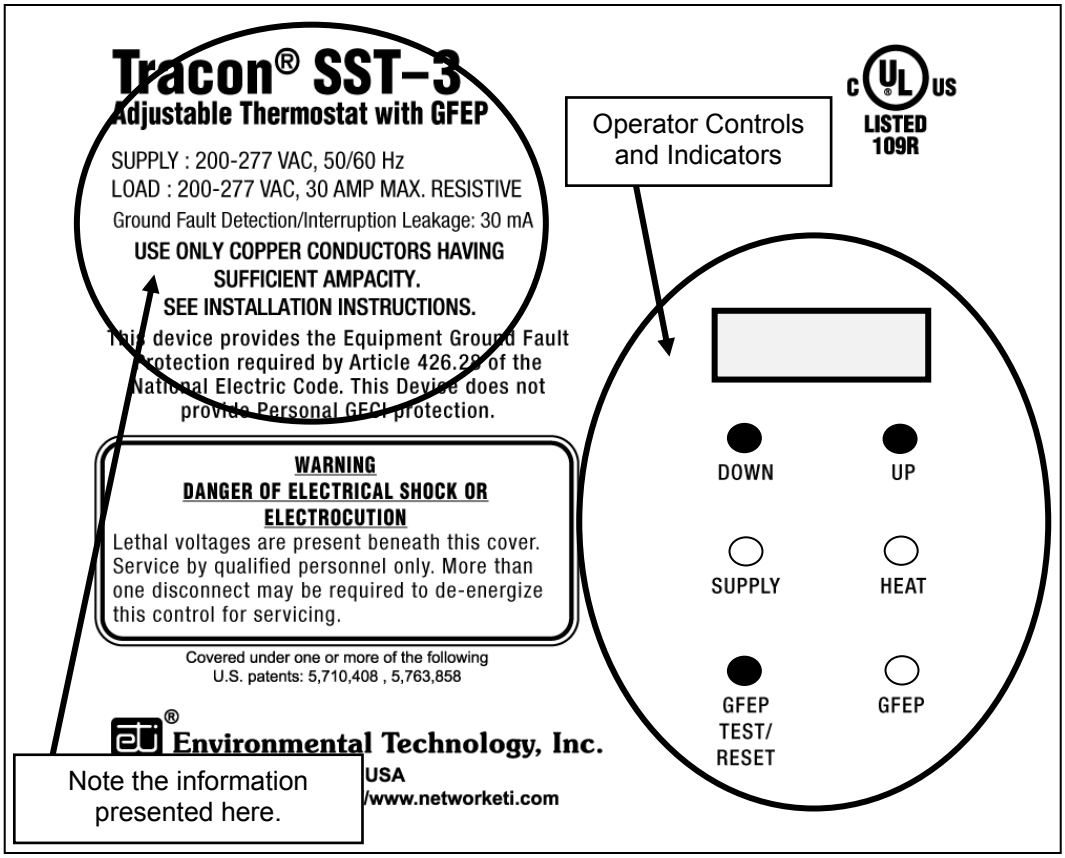

Figure 5. THE SST–3 FRONT PANEL.

Note that because the unit has no ON/OFF power switch, power runs to the unit as soon as facility power is connected to it. For as long as power is running to the unit, the green SUPPLY LED will always be lit. The unit initiates a heating cycle when the temperature probe detects a temperature of less than the set point and remains on until a temperature 2 degrees Fahrenheit or 1 degree Centigrade above the set point is detected.

Operator controls and indicators are explained below. Refer to Figure 6.

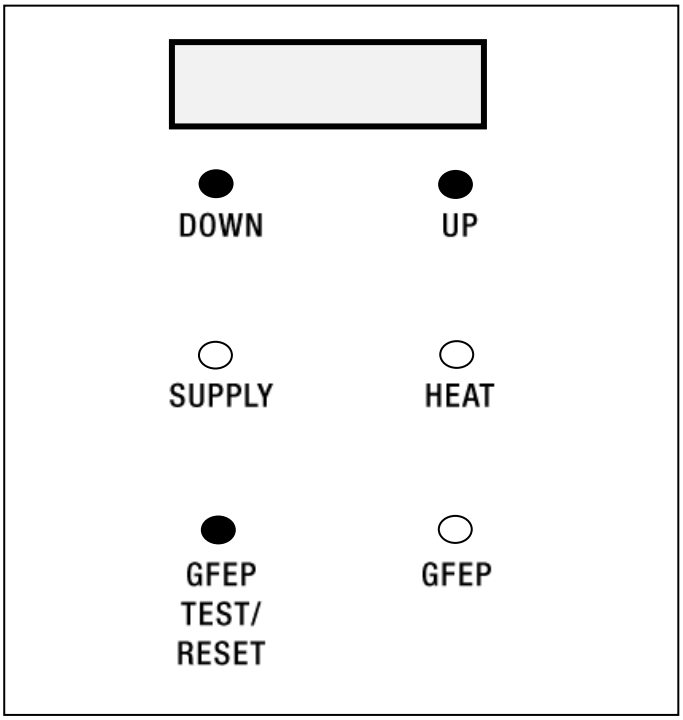

Figure 6. SST–3 OPERATOR CONTROLS AND INDICATORS.

DISPLAY Current temperature, temperature set point, and error codes are displayed here. Press both the Up and Down control buttons at once for 1 second to configure. Refer to pages 18 and 19.

DOWN Press to decrease temperature set point. Hold for faster change.

UP Press to increase temperature set point. Hold for faster change.

SUPPLY The green SUPPLY LED lights up and stays lit as long as power is running to the unit, whether it is currently in a heating cycle or not.

HEAT The yellow HEAT LED indicates a heating cycle is currently in progress.

GFEP TEST Press to reset a Ground Fault indication or to initiate a manual test of the Ground Fault circuitry. Hold to display ground fault level.

GFEP The red GFEP LED indicates a Ground Fault condition. This LED will flash during a GFEP test.

NORMAL OPERATIONS

Under normal operations, as long as facility power is running to the unit, the green SUPPLY LED will be lit solid and the system will provide heat, indicated by the yellow HEAT LED, based on the thermostat set point. Any error condition that might occur will be indicated in the display window. Error codes are explained on page 21. The unit is designed to turn the heaters on as soon as the temperature reading at the point of the temperature probe drops below the set point and will keep the heaters on until the temperature reaches 2 degrees F or 1 degree C higher than the set point, at which time the heaters will shut off. Should it be desired to change the set point, do so using the Up and Down control buttons on the front panel of the unit as described on page 16.

THE DISPLAY WINDOW

The unit has a 3-character display window which provides useful information regarding the function and condition of the system. During the 2-second system initialization process, in the first half-second, the yellow Heat LED will come on and the window will display the first character. In the second half-second of initialization, the red GFEP LED will come on and the window will display the second character. In the third half-second of initialization, both LEDs will come on and the window will display the third character. Finally, in the fourth half-second, both LEDs shut off and the firmware version number will be displayed.

A Fahrenheit reading will be displayed as one or two digits, followed by an F. A Centigrade reading will be displayed as one or two digits, followed by a C. Should the temperature be above 100, as the display has but three characters, a reading of three digits without a letter following indicates a Fahrenheit reading.

If the GFEP Test / Reset button is pressed for at least 1 second, the display will show the current ground fault level in mA instead of the temperature.

If the temperature probe is bad, the window will display an approximation of question marks, followed by an F or a C.

During normal operations, the display window will show the current temperature, as well as flash with any current alarm condition, if there is one. If there are no current alarm conditions, the display will show just the current temperature.

CHANGING THE THERMOSTAT SET POINT

To set or change the thermostat set point, perform the steps below. Remember when setting the new value that the display shows the set point degrees in the same unit of measure (°F or °C) used to display the current temperature. Depending on the new set point and the current temperature at the location of the temperature probe, the Heat LED might come on until the new set point level is reached. In addition, the LL or Low Temperature Limit error code might also be indicated until the heaters have warmed up to within 4 degrees of the setpoint. This is especially true during initial system start-up or if the power has been off for some time.

1. With power running to the unit, press either the Down or the Up switch. Now, instead of the current temperature, the window will show the current set point and the display will flash.

2. While the display is flashing, press the Down switch to decrease the set point or the Up switch, as desired, to increase the set point. Holding the Down or Up switch will make the setting change faster.

3. Once the display indicates the new desired set point, release the switch. After 3 seconds, the new value will be set, the display will stop flashing, and the window will show the current temperature.

CHANGING THE TEMPERATURE DISPLAY MODE

The SST–3 can display temperature either as degrees Fahrenheit or as degrees Centigrade. To toggle from either mode to the other, perform the steps below.

1. Hold down both the Up and Down switches for about one second until the display changes. Display will show units (**CEn** or **FAH**) for Centigrade or Fahrenheit.

2. Press the Down switch to change the display mode.

3. Press the Up switch to advance the display. Display will show **FPr** or **nor**. (See below for Fire Protection Mode.)

4. Press the Up switch to finish.

FIRE PROTECTION MODE

While in the Fire Protection Mode, in the event of a ground fault, the SST–3 will keep the heaters going even with the ground fault. To put the system into, or to take the system out of, the Fire Protection Mode, perform the steps below. As you might see from the description below, the process for changing the temperature display mode above and the process for putting the unit into or out of the Fire Protection Mode are very similar and can both be done at the same time. However, as either one of these actions can be taken independently, allowing changing only one setting without changing the other, the process has been divided into two separate procedures and presented here separately.

1. Hold down both the Up and Down switches for about one second until the display changes. Display will show units (**CEn** or **FAH**).

2. Press the Up switch to advance. Display will show **FPr** for Fire Protection Mode or **nor** for Normal mode.

3. Press the Down switch to change modes, as desired.

4. Press the Up switch to finish.

GROUND FAULT OPERATION

USING THE GFEP TEST/RESET BUTTON

GFEP (Ground Fault Equipment Protection) circuitry is present inside this unit. The system software checks for ground fault conditions continuously at set intervals. If the GFEP LED is lit, press the GFEP Test/Reset button to try and clear the situation and reset the ground fault circuitry. The GFEP will perform a test of the ground fault circuitry, during which time, the GFEP LED will blink. Pressing the button will not clear a “hard” fault. When the GFEP LED is lit, unless the system has been set in Fire Protection Mode, the heaters are turned off and will remain off until the condition is cleared. When the GFEP LED is not lit, the operator may press the GFEP Test/Reset button, as desired, to manually initiate a test of the GFEP circuitry. During the test, the GFEP LED will flash rapidly for a few seconds while the unit first tests the internal circuitry and then turns on the heaters to check for a ground fault, and will then shut off.

In the event of a ground fault condition that is not cleared by pressing the GFEP Test/Reset Button, perform the steps below.

1. If the GFEP LED on the control box is still lit after pressing the GFEP Test/Reset Button, remove power from the unit using the service disconnect or the circuit breaker.

2. Perform a “megger” test of the heater cables and compare the results to those obtained during Post-Installation Testing and recorded on page 2 of this manual.

3. Locate and fix the problem, typically found along the run of the heat tape. Contact the heat tape manufacturer for help troubleshooting the heat tape.

4. Restore system power. Because the presence of a ground fault condition is stored in memory, even after repairing the ground fault condition, the GFEP LED might still be lit following restoration of system power. In this case, press the GFEP Test/Reset button again and the LED should go out and normal operations can resume.

ERROR CODES

Four error codes or conditions can be indicated in the display window of the SST–3. They are explained below.

LL Low temperature limit error

This error code indicates that the temperature has been 4 degrees F (or 2 degrees C) below the set point for 30 seconds or longer. This error condition will go away once the situation is addressed. The most likely cause of this condition is that the heaters are broken or disconnected or, possibly, not powerful enough if it is very cold outside. This error code can also be indicated when the unit is first started up if the ambient temperature is below the set point.

GFA Ground Fault alarm error

This indicates a ground fault condition external to the SST–3 unit. In this case, check the wiring and cables leading to and from the unit. After the problem has been located and corrected, press the GFEP Test/Reset button to see if the situation has been resolved.

GFC Ground Fault Circuit error

This code indicates a failure of the ground fault circuitry internal to the SST–3 unit. Press the GFEP Test/Reset button to try to clear the situation. If pressing the GFEP Test/Reset button does not resolve the situation, contact Environmental Technology Technical Support for possible service options.

Prb Temperature Probe error

This error code indicates that the temperature probe is either bad or not properly connected. Remove power from the unit and make sure the temperature probe is properly connected to the two leads on the right side of the PC board as shown in Figure 3 on page 11. If the temperature probe is properly connected, then either the probe or the unit might require service. To troubleshoot this situation, using a digital voltmeter (DVM), check the resistance of the probe when disconnected from the circuit. The reading should be about 100K at room temperature. If the reading is very low (3K or less) or very high (9M or higher), the temperature probe is bad. If the probe is OK, try substituting a 20K to 200K resistor and if the alarm persists, the problem is likely internal to the unit.

MAINTENANCE

To ensure the best function and results, it is recommended to always keep the area around the temperature probe clean from debris and general obstructions to maximize its sensitivity and effectiveness.

USING THE JUMPER

A jumper on the PC board prevents unauthorized changing of the thermostat set point. To initially set the thermostat set point, perform the steps below.

1. With power running to the unit, begin by changing the set point value to the desired level. Refer to page 18 in this manual.

2. Shut off unit power.

3. Remove the unit faceplate. Retain attaching hardware.

4. Locate the jumper on the PC board. Refer to Figure 7. Position the jumper, as desired, between Pins 1 and 2 or between Pins 2 and 3.

5. Reassemble the unit face plate onto the front of the box.

6. Restore unit power.

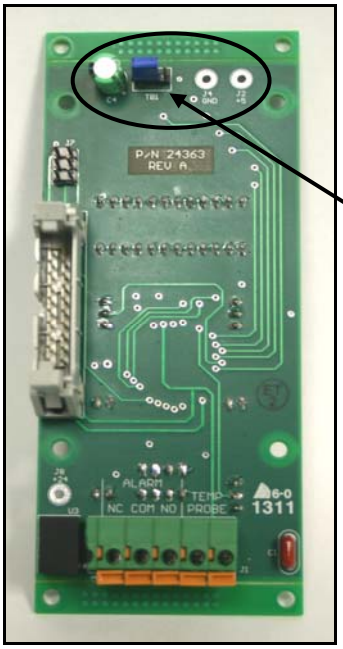

Position jumper between Pins 1 and 2 or between Pins 2 and 3, as desired. Jumper is shown here in the unlocked position.

Figure 7. THE JUMPER ON THE FRONT PANEL PC BOARD.

Use this procedure to set the set point for the first time. To change the set point after the initial setting, it will be necessary to first remove power, reposition the jumper, change the set point, then return the jumper to the locked position.

TROUBLESHOOTING

If any unusual condition occurs with the unit, refer to troubleshooting charts 1 and 2 in this section. Prior to removal of any equipment, contact Environmental Technology, Inc., Technical Support at (800) 234-4239 between 8:00 a.m. and 5:00 p.m., Eastern Time, to begin the troubleshooting process.

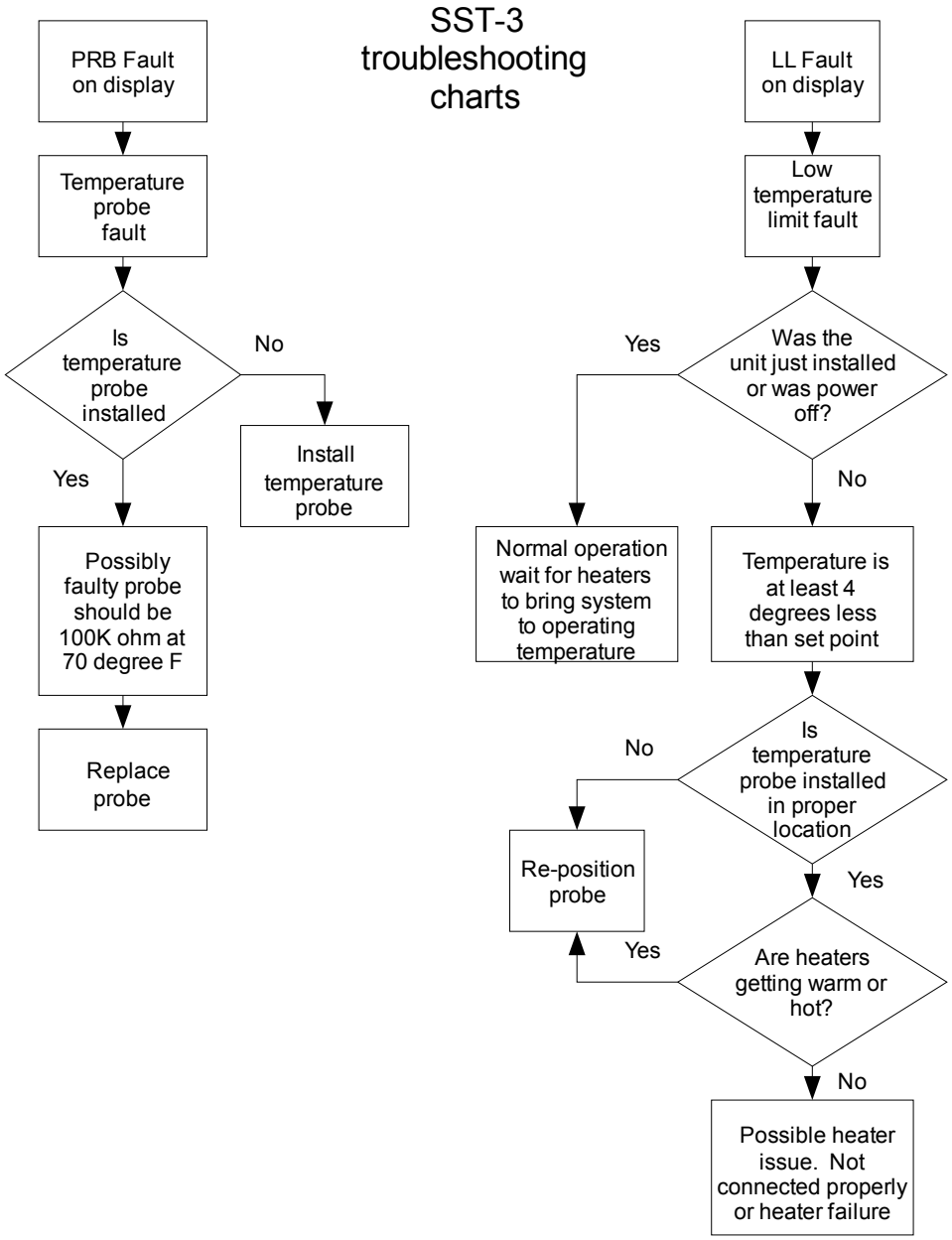

TROUBLESHOOTING FLOWCHART 1.

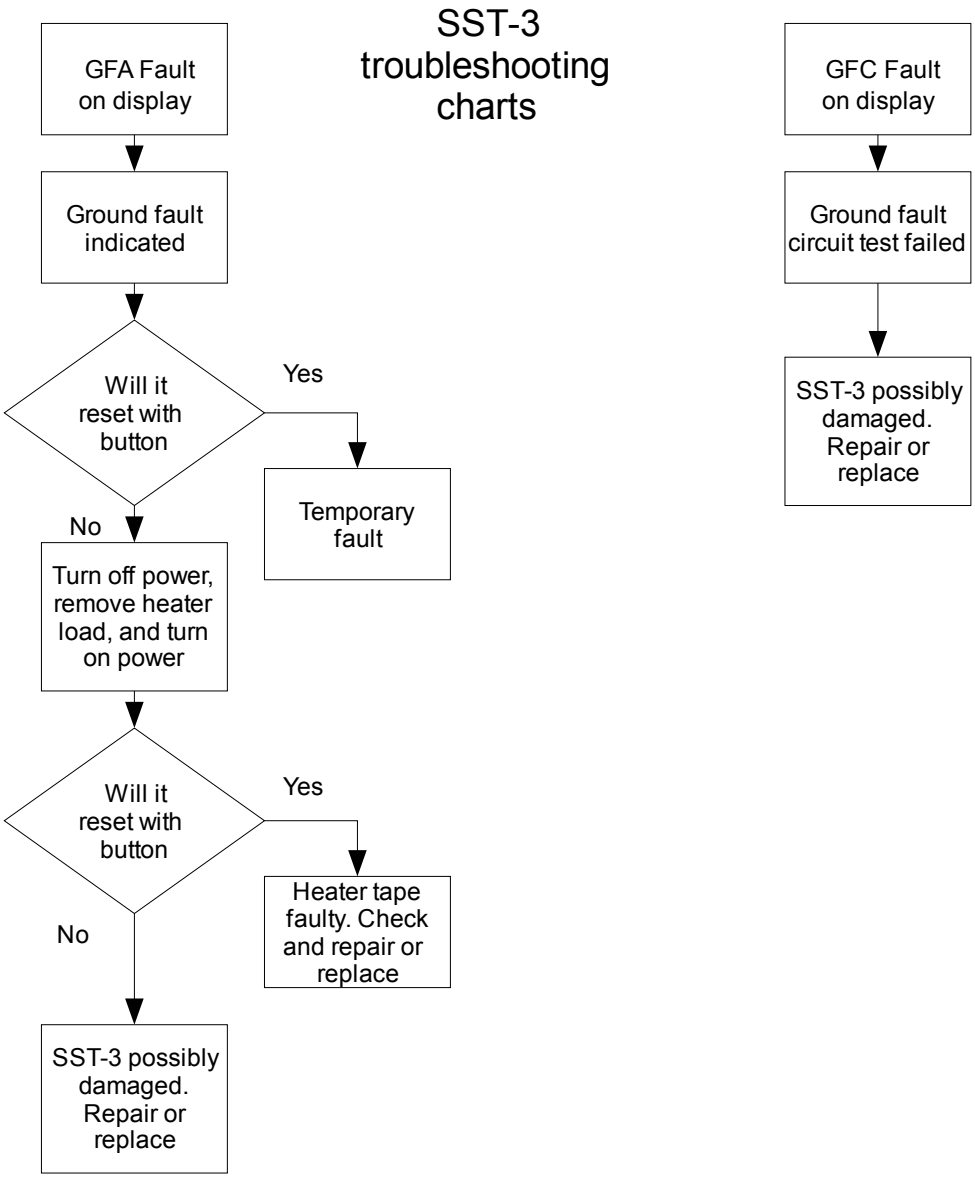

TROUBLESHOOTING FLOWCHART 2.

SPECIFICATIONS

GENERAL

Areas of Use	Nonhazardous
Approvals	• UL Listed to UL 1053 Ground-Fault Sensing and Relaying Equipment

ENCLOSURE

Protection	IP 66 NEMA 4X
Dimensions	5 1/4” (L) x 8” (W) x 4 1/16” (H) 133.2mm (L) x 203.2mm (W) x 103.2mm (H)
Material	Polycarbonate
Cover Attachment	Polycarbonate cover, machine screws
Weight	3 pounds (1.4kg)
Mounting	Wall Mount
Cable Entries	4: incoming power cable @ 1.05”; (27mm) outgoing heater cable @ 1.05”; (27mm) outgoing alarm relay @ 1.05”; (27mm) incoming temperature probe @ 0.67” (17mm)

FRONT PANEL INTERFACE

Status Indicator	SUPPLY (green): Power on HEAT (yellow): Heating cycle in progress GFEP (red): Ground fault condition GFEP (red, rapid flashing): GFEP test in progress

CONTROL

Supply Voltage	200 - 277 VAC; 50/60 Hz
Heater	200 - 277 VAC; 30 Amp Maximum Resistive Load

GROUND FAULT EQUIPMENT PROTECTION

Set Point	30 mA
Automatic Self-Test	GFEP verified before contactors operate; GFEP tests on start-up of power and automatically every 24 hours
GFEP Manual Test/Reset	GFEP Test/Reset switch on front panel

WIRE AND CABLE RATINGS

Power Cable	Size for heater load (30 Amp maximum)
Alarm Relay Wiring	No larger than #18 AWG jacketed, 3-conductor (Only two leads will be used; refer to Figure 3 on page 11.)
Heater Cable	Size for maximum heater load
Temperature Sensor Wiring	#18 AWG jacketed, 2-conductor

ENVIRONMENTAL

Operating Temperature	−31°F to +130°F (−35°C to 55°C)
Storage Temperature	−67°F to +167°F (−55°C to 75°C)

THERMOSTAT SET POINT

SST–3 Set Point Range	+34°F to +150°F (1°C to 65°C)

ORDERING INFORMATION

Order Number	Description
24492	TRACON Model SST–3 Adjustable Electronic Thermostat
24493	SST–3 Data Sheet
24497	SST–3 Installation Sheet
24494	SST–3 Instruction Manual (this document)
23731	Accessory Kit
19272	Temperature Probe Assembly

QUESTIONS AND COMMENTS

For technical help, questions, or comments concerning this product or any of Environmental Technology, Inc., products, contact the Customer Service Department between 8:00 a.m. and 5:00 p.m. Eastern Time at:

Voice: (800) 234-4239 (USA and Canada) or (574) 233-1202 (elsewhere)
Fax: (888) 234-4238 (USA and Canada) or (574) 233-2152 (elsewhere)
E-mail: info@networketi.com

DISCLAIMER

Environmental Technology, Inc. makes no representations or warranties, either expressed or implied, with respect to the contents of this publication or the products that it describes, **and specifically disclaims any implied warranties of merchantability or fitness for any particular purpose.** Environmental Technology, Inc. reserves the right to revise this publication and to make changes and improvements to the products described in this publication without the obligation of Environmental Technology, Inc. to notify any person or organization of such revisions, changes or improvements.

No part of this manual may be reproduced or translated in any form or by any means, electronic or mechanical including photocopying and recording, for any purpose without the express written consent of Environmental Technology, Inc.

The ETI logo, We Manage Heat, and TRACON are registered trademarks of Environmental Technology, Inc.
SST is a trademark of Environmental Technology, Inc.

Copyright © 2012 Environmental Technology, Inc. All rights reserved.