Solaira SHP High Power Control

Description: **Phase-Angle SCR Power Controls**
Product Range: **110-240 VAC, Single-Phase, 30, 80 , 150 and 350 amps for up to 84,000W systems**
Application: **Variable Resistance Loads for Infrared Heating Systems**

Certifications: **cULus approved (ANSI/UL 508, ANSI/UL60947-1, ANSI/UL 60947-4-1A, CSA-C22.2 #14)**

TYPICAL APPLICATIONS

* **Infrared Heating Control**
* **Infrared Paint Drying**
* **Infrared Ink Drying**
* **Heat Sealing**
* **Silent Arcless Switching**
* **Replace Variable Transformers**
* **Open-Chassis or Enclosed**
* **Packaging**

FEATURES

* **All Solid State Construction**
* **Exclusive "2 Millisecond" Fuses for Short-Circuit Protection**
* **Exclusive " V*bo* Clamping" Transient Voltage Protection**
* **Exclusive Full Rated Operation In 50°C (122° F) without fans**
* **Universal architecture for 110 - 120V / 208 - 240V application**
* **1/2 Second Soft-Start**

SOLAIRA SHP CONTROLS are sold without VENTED enclosures. UL approved VENTED enclosures are sold separately or sourced locally. It is imperative that the enclosure be vented to allow for adequate air flow through the controller, inadequate airflow could cause the control fuses to not perform to their engineered specification.

SOLAIRA SHP HIGH POWER CONTROLS utilize phase-angle firing to provide infinitly variable control of single-phase A.C. voltages to variable resistance loads for quartz/tungsten emitter and tube systems. These units are solid state and when operated within their stated ratings for current, voltage, and temperature, have no known MTBF or life expectancy rating.

SOLAIRA SHP HIGH POWER CONTROL can be equipped with low voltage input card for integration with BMS controls. Optically isolated input, open or closed loop apps with 1-5ma, 2 – 10 ma, 4 – 20 ma, 12 – 20 ma, 10 – 50 ma options

THREE PILLARS OF PROTECTION

SOLAIRA SHP HIGH POWER CONTROLS incorporate exclusive design features to protect power semiconductor components against damage:

- Unique "V*bo* Clamping" provides unmatched protection for power semiconductors against transient voltage spikes common on commercial and industrial power mains.
- 2 millisecond* fuses protect semiconductors against shod-circuit faults. **SOLAIRA SHP HIGH POWER CONTROLS** are equipped with factory and approved fuses coordinated with power semiconductors.
- Proprietary heatsinks are engineered in-house, coordinating finite-element analysis (FEA) with on-site lab tests. **SOLAIRA SHP HIGH POWER CONTROLS** operate at 50° C (122° F) with no derating.

APPLICATION FLEXIBILITY

Standard configuration of all Series 18D-SOL SCR controls is manual control via a 270° turn potentiometer (included). A 1/2 second soft-start feature minimizes the current inrush to variable-resistance loads when first energized. Standard option allow for automatic open or closed loop control in response to analog control signal from a temperature controller, PLC I/O module or other external source. Other options allow controls to be configured for the specific requirements of each application.

SPECIFICATIONS

Power Circuit: inverse-parallel semiconductors selected for Vbo Clamping transient protection, with parallel R-C circuit for dv/dt protection. Current-clamping 2 millisecond power fuses in series with the power semiconductors provide short-circuit protection.

Mains Frequency: 50/60 Hz standard

Output Voltage: 4% to nominal input voltage, infinitely variable.

Overall Efficiency: 98.5 to 99.5%.

Power Loss: approximately 1-2 watts/ampere/switched pole.

Voltage Drop Across Power Circuit at 100% Output: 1-2 volts maximum per switched pole.

Proof Voltage: (isolation between power circuit, control circuit and ground) greater than 2 kV.

Control input: manual control via 75K Ohm potentiometer with Integral On/Off switch and calibrated dial plate standard.

Control Power: 5 watts minimum, derived from 12 VA isolation control transformer on all units.

Fuse Protection: 2 millisecond fuses are factory tested and coordinated with all power semiconductors, considering:

a. fuse element melt time t_{melt}
b. peak melt current I_{melt}
c. arc quench time t_{arc}
d. peak arc current I_{arc}

Transient Voltage Protection: voltage breakover (Vbo) protection with R-C filters for dv/dt protection.

ENCLOSURES

SOLAIRA SHP HIGH POWER CONTROLS are supplied WITHOUT enclosures. Most electrical supply companies offer competitively priced options to enclose Solaira SHP controller. Should a contractor or wholesaler require enclosures, please contact Solaira directly for cost and availability.

SIZING CONSIDERATIONS

SOLAIRA SHP HIGH POWER CONTROLS Model are designed for use on variable resistance loads such as quartz/tungsten emitters and tubes. **Size units by actual load amps and not kW.**

1. Always use maximum possible load current for sizing purposes.
2. SHP Controls can operate at either 110-120V or 230-240V with electrician installation based on operating voltage.
3. The amp rating on all Solaira SHP power controls is stated on the nameplate. Steady-state current draw must not exceed that rating.
4. Rated voltage of the connected load should match the input voltage to the power control.

SIZING EXAMPLE

Example 1: Application: Variable control of single phase, 240 VAC, 4 (four) 3.0 kW Solaira Alpha H2 Heaters (SALPHAH2-30240S) heaters; 240 VAC, single phase. 60Hz input voltage.

a. Total wattage: 12,000 W calculated as 4 heaters X 3.0 kW X 1000
b. 240VAC input
c. Amp rating, calculated as follows:

$$\frac{12{,}000\text{W}}{240\text{V}} = 50.0 \text{ amp}$$

Since 50.0 < 80, amp rating: 80
Model Number to be specified: 18D-2-80-SOL

Example 2: Application: Variable control of single phase, 120 VAC, 2 (two) 1.5 kW Solaira Cosy AW Heaters (SCOSYAW15120B) heaters; 120 VAC, single phase. 60Hz input voltage.

a. Total wattage: 3,000 W calculated as 2 heaters X 1.5 kW X 1000
b. 120VAC input
c. Amp rating, calculated as follows:

$\frac{3{,}000W}{120V}$ = 25 amp **Since 25 < 30, amp rating: 30**
Model Number to be specified: 18D-2-30-SOL

WHEN ORDERING, SPECIFY:

- **MODEL NUMBER'INPUT VOLTAGE (IN VOLTS)**
- **LOAD SPECIFICATION (IN kW)**

SOLAIRA SHP HIGH POWER CONTROL (Enclosure not included)
Single-Phase, 110-120 VAC (0 – 118 VAC Output) or 208/220/240 VAC (0 – 206/218/238 VAC Output), 50/60 Hz

Model Number	Max. Amp	KVA@ Max. Rated Volts 120v/240v	Fuse Number	Open Chassis Dimensions (Inches/Millimeters) Height	Width	Depth	Enclosed Dimensions (Inches/Millimeters) Height	Width	Depth
18D-2-30-SOL	30	3.6/7.2	49A50-80	7 (178)	5.5(140)	5.5(140)	14(356)	12(305)	8(204)
18D-2-80-SOL	80	9.6/19.2	49A50-150	12 (305)	6 (153)	7 (178)	14(356)	12(305)	8(204)
18D-2-150-SOL*	150	18.0/36.0	49A50-250	15 (381)	9.5 (242)	8 (204)	20(508)	16(407)	9(229)
18D-2-350-SOL**	350	42.0/84.0	49A50-600						

Low Voltage input Card for BMS Systems add:

-21A	1 – 5ma., <-1000 Ω	-21D	12 – 20ma., <- 600 Ω
-21B	2 – 10ma., <-1000 Ω	-21E	10 – 50ma., <- 300 Ω
-21C	4 – 20ma., <- 600 Ω		

* SPECIAL ORDER ** SPECIAL ORDER, CALL FOR INFORMATION

Optional Vented Enclosures

Control	Enclosure
18D-2-30-SOL	SHE30ENCLOSE
18D-2-80-SOL	SHE80ENCLOSE
18D-2-150-SOL	SHE150ENCLOSE
18D-2-350-SOL	SHE350ENCLOSE

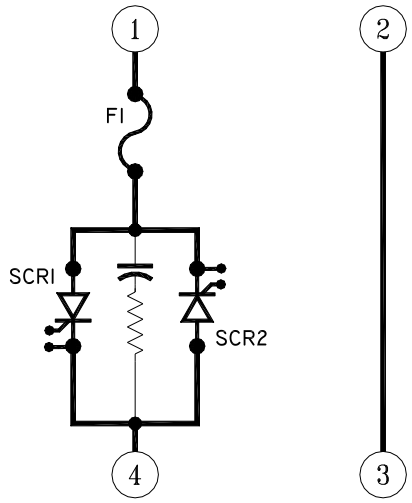

POWER CIRCUIT SCHEMATIC

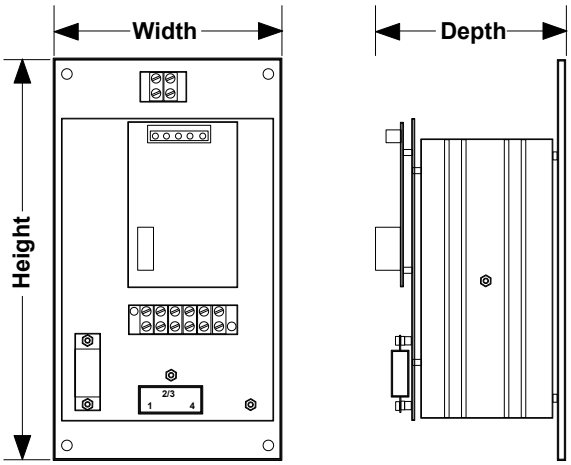

OPEN CHASSIS DIMENSIONS